computar

T21Z5816DC-CS

21X 5.8mm - 121.8mm F1.6
for 1/3 type Cameras, Motorized Zoom
CS-Mount

with DC Auto Iris

1/3 type

Model No.		T21Z5816DC-CS		Effective Lens Aperture	Front	∅53.2mm	
Focal Length		5.8mm - 121.8mm			Rear	∅10.6mm	
Max. Aperture Ratio		1:1.6		Back Focal Length		13.6mm	
Max. Image Format		4.8mm x 3.6mm(∅6mm)		Flange Back Length		12.5mm	
Operation Range	Iris	F1.6 - F560C		Mount		CS-Mount	
	Focus	1.5m - Inf.		Filter Size		M62 P=0.75mm	
	Zoom	5.8mm - 121.8mm		Tripod Screw		1/4 - 20UNC	
Control	Iris	DC Auto Iris		Dimensions		W70mm x H81mm x D126.5mm	
	Focus	Motorized		Weight		650g	
	Zoom	Motorized					
Object Dimension at M.O.D.	5.8mm	123.7cm x 91.1cm					
	121.8mm	6cm x 4.7cm					
Angle of View	D	1/3 type	55.5° - 2.9°	1/4 type	42.0° - 2.2°		
	H		44.8° - 2.3°		33.8° - 1.8°		
	V		33.8° - 1.8°		25.3° - 1.3°		
		Iris		Focus		Zoom	
Supply Voltage		—		DC8V		DC8V	
Current		—		40mA or less		35mA or less	
Response Time		—		Approx. 4.5 sec.		Approx. 3.5 sec.	
Preset Potentiometer		—		—		—	
Coil	Drive	190Ω					
	Control	1000Ω					
Operating Temperature		−10°C - +50°C					

M.O.D. : Minimum Object Distance

CS

Dimensions

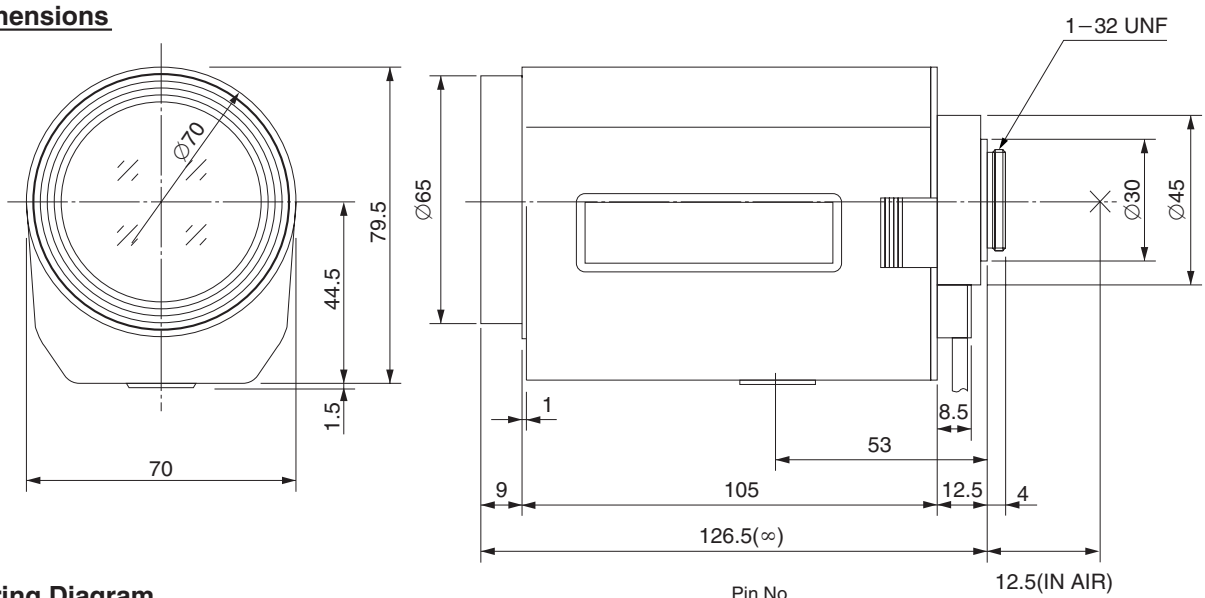

Wiring Diagram

IRIS

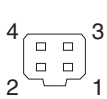

Pin No.		
1	BROWN	Control (−)
2	RED	Control (+)
3	YELLOW	Drive (+)
4	ORANGE	Drive (−)

FOCUS

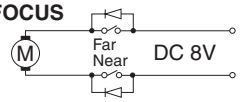

	Near	Far
GREEN	+	−
BLACK	−	+

ZOOM

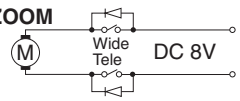

	Tele	Wide
YELLOW	+	−
RED	−	+